WEIGHING REPORT

Model: DA 40 NG Serial Number: D4.248 Registration: OH-STL

Data with reference to the Type Certificate Data Sheet and the Airplane Flight Manual.

Reference Plane: Vertical plane 2194 mm (86.38 in) in front of the leading edge of wing at the root rib.

Horizontal reference line: Wedge 600:31 (2.96°), 2910mm (114.57 in) aft of the step in the cockpit trim.

Equipment Inventory - dated: 07. Apr. 16 Cause for Weighing: OSB-D4-080/1

Weight and Balance Calculations (Weighing at the wheels)

Weight Condition: Include brake fluid, engine oil (MAX level), coolant, and unusable fuel (2 x 1 US gal / 2 x 3.8 liters).

Support	Gross	Tare	Net
MAIN G_{1LH}	375 kg	0 k	375 kg
MAIN G_{1RH}	380 kg	0 k	380 kg
NOSE G_2	154,4 kg	0 k	154,4 kg
		Empty Weight	909,4 kg

Lever Arm	
X_{1LH} =	2742 mm
X_{1RH} =	2742 mm
X_2 =	880 mm

Calculate the Empty Weight, G = MAIN G_{1LH} + MAIN G_{1RH} + NOSE G_2. *Empty Weight must be between 849,5kg (1872 lb.) and 958,5kg (2113 lb).*	G = 909,4 kg
Calculate the Empty Weight Moment, M = ((G_{1LH} + G_{1RH})* X_1) + (G_2 * X_2).	M = 2206,1 kgm
Calculate the Empty Weight Center-of-Gravity position, X_{CG} = M/G.	X_{CG} = 2,426 m
Maximum Take Off Weight MTOW - (-)	1280 kg (2822 lb.)
Maximum useful load = MTOW - G.	370,6 kg

Record the Empty Weight (G) and the Empty-Weight Moment (M) in the Airplane Flight Manual.

Place/Date	Authorizing Stamp	Authorizing Signature
Wr. Neustadt 07. Apr. 16		Hr. Köstler

Trim of Empty Weight Center-of-Gravity Position:

Mass Trim Weight in kg:	0	New Empty Weight in kg:	909,4
Moment Arm in m:	7,214	New Empty Weight Moment in kgm	2206,1
Moment Trim Weight in kg	0,0	New Empty Weight CG in m	2,43

DateTrim: performed by:

REVISION

REV	SH	ZONE	DESCRIPTION	DATE	APPROVAL
-	01	ALL	VÄM 42-004 FIRST RELEASE	24.02.10	VOLCK
A	01	ALL	REDLINECORRECTION IN SECTOR D8 TAIL G2 CORRECTED TO NOSE G2. IN SECTOR C8 TABLE MAXIMUM PERMITTED ALL UP WEIGHT AND MAXIMUM USEFUL LOAD CANCELLED. DRAWING CONVERTED TO NEW DRAWING STANDARD	10.04.12	KORNFEIND
B	01	ALL	MÄM 40-379 IN SECTOR E7 WEIGHING AT THE JACKING POINTS CORRECTED TO WEIGHING AT THE WHEELS IN SECTOR D5 X-CORRECTED TO X_{1LH} AND X_2 CORRECTED TO X_{1RH} AND NEW TEXT X_2 IN SECTOR D8 TAIL G_2 CORRECTED TO NOSE G_2 IN SECTOR D8 NEW DESCRIPTION MAXIMUM TAKE OFF WEIGHT MTOW AND MAXIMUM USEFUL LOAD = MTOW - G. DIMENSIONS & NEW VIEW ADDED IN SECTOR C8 TEXT EMPTY WEIGHT NEW ADDED IN SECTOR C5 TEXT 1280kg NEW ADDED	05.11.12	SEE TB

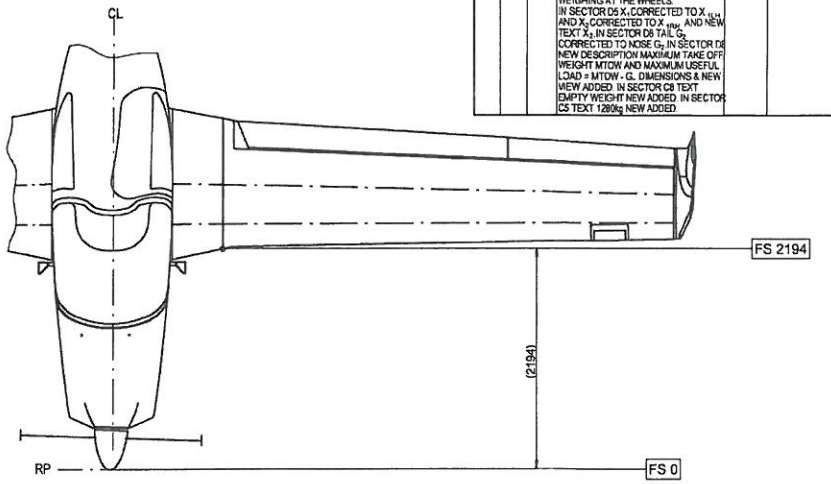

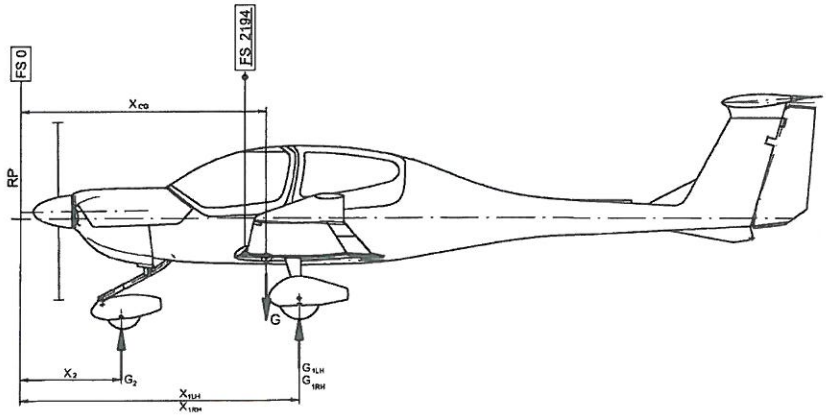

DIMENSIONS METRIC	IDENTIFICATION MARKINGS DP-S-17-00001	Diamond Aircraft Industries	N. A. Otto-Straße 5 A-2700 Wiener Neustadt
FIRST ANGLE PROJECTION FORMAT A2	CLASSIFICATION: NONE	DEPARTMENT / SIGN / DATE	PROJECT DA 40 NG
UNLESS OTHERWISE SPECIFIED DIMENSIONS ARE IN MM	INTERCHANGEABLE PART NO	DRAWN Mayr ; V. 05-Nov-2012	TITLE WEIGHING REPORT (WEIGHING AT THE WHEELS)
DIMENSION TOLERANCES 3.2	THIS DRAWING WAS PRODUCED USING SOFTWARE: SOLID EDGE V18	CHECKED: Scheikl 26.04.13	
2 DECIMAL ±0,25 1 DECIMAL ±0,5 DECIMAL ±1 ANGLE ±1° RAD ±0,5 FINISH IN MICRO-METER	FILENAME D44-0810-00-00b.dft	QA: N/A	
		STRESS: N/A	
		MANUF.: N/A	
		SYSTEM: Krasshitzer 26.04.13	DWG.ORIG. DAIA DWG.NO. D44-0810-00-00 RCV B
		APPROVED: Scheikl 19.08.13	CODE 710197 SCALE NTS SH 01 OF 01

ALL RIGHTS RESERVED FOR THIS DOCUMENT WHICH MAY NOT BE REPRODUCED OR DISCLOSED TO THIRD PARTIES WITHOUT THE PRIOR WRITTEN CONSENT OF DIAMOND AIRCRAFT INDUSTRIES

Confidential